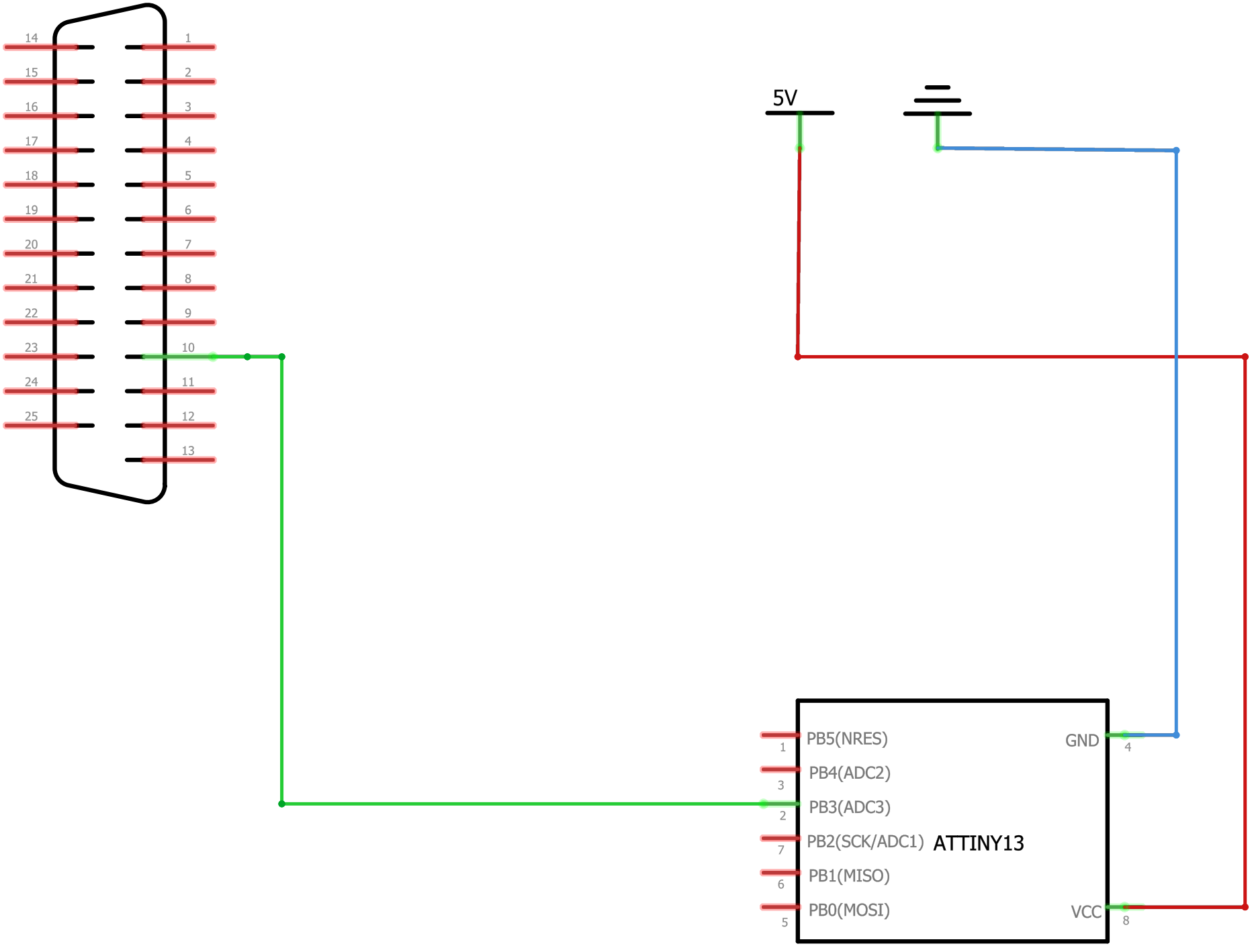
14
15
16
17
18
19
20
21
22
23
24
25
1
2
3
4
5
6
7
8
9
10
11
12
13
5V
PB5(NRES)
PB4(ADC2)
PB3(ADC3)
PB2(SCK/ADC1)
PB1(MISO)
PB0(MOSI)
ATTINY13
GND
VCC
1
3
2
7
6
5
4
8

fritzing